IoT-BASED SMART AGRICULTURE MONITORING SYSTEM

Sharipah binti Daud[1*], Rahimah binti Abdul Rahman[2], Muhammad Hairul Amir Bin Mohd Zainal[3]

[123]Electrical Engineering Department, Tuanku Sultanah Bahiyah Polytechnic, Kulim Hi-Tech Park, 09000 Kulim, Kedah, Malaysia

*Corresponding author e-mail address: sharipah@ptsb.edu.my

ABSTRACT

This paper provides the development of an Internet of Things (IoT)- based smart agriculture monitoring system designed to monitor the environmental temperature, soil moisture, and humidity of the crop soil. The system uses sensors, including the temperature and humidity sensor for temperature and humidity monitoring, and a soil moisture sensor to detect the level of soil moisture. These sensors connect to an ESP32 microcontroller, the central element for data processing and communication. These sensors transmit data to a smartphone application, which gives users immediate access to essential information about their plant. When the temperature and humidity levels surpass predetermined limits, the water pump will function to ensure that crops receive sufficient water at the right time. With the support of the Blynk App, users may remotely monitor and control the system using the mobile application, which provides real-time alerts. By utilizing IoT technology, an intelligent agricultural field monitoring system that tracks temperature and humidity in the soil can be achieved. The implementation of this system tends to eliminate water waste, save labor costs, and develop more sustainable as well as effective farming techniques. By using this technology, farming operations will become more intelligent, and agricultural output will increase significantly.

Keywords: Internet of Things, Agriculture, monitoring, Blynk App

1. Introduction

Growth in the agricultural sector is necessary for the development of the economic condition of the country. The need for increased productivity in all industries, particularly agriculture, is a result of the growing world population.[1] However, there will be times when supply and demand are out of balance. To improve agricultural productivity, managing and maintaining capital and labor remains a difficult task.[2] Unfortunately, many farmers still use the traditional methods of farming which results in low-yielding crops and fruits.[3] The existing method and one of the oldest ways in agriculture is the manual method of checking the parameters. In this method, the farmers verify all the parameters and calculate the readings.[4] Agriculture needs to advance along with the global trend toward new technology and applications. Sustainable and effective farming methods are becoming more and more important due to factors like climate change, the busiest daily life, and the loss of natural resources. Conventional farming practices frequently depend on physical labor and subjective judgment, which can result in wasteful water use, unpredictable crop yields, and higher operating expenses. Furthermore, these problems are made worse by the unpredictable nature of weather patterns, which makes it challenging for farmers to maintain ideal growing conditions.[5]

Since agriculture is the primary source of food grains and other raw materials, it is regarded as the foundation of life for the human species. It is essential to the expansion of the national economy. Using modern technologies can assist farmers in both remotely monitoring their crops and promptly taking corrective action. They can raise crop quality and productivity without requiring a lot of labor.[6] Figure 1 provides an overview of the elements of IoT-based

smart agriculture, while Figure 2 shows smart agriculture integrated with an IoT monitoring system.[3]

Fig. 1. IoT for agriculture.

Fig. 2. IoT monitoring system.

The agricultural industry has recently been greatly impressed by the Internet of Things, whose applications are growing significantly each year. By incorporating the concept of IoT-based systems into agriculture, farmers can monitor environmental conditions to help farmers monitor useful information from the farm as well as to help improve the quality and quantity of products. [7] This project aims to develop an IoT-based smart agriculture monitoring system that addresses the above critical challenges. The system consists of one main part which is a detection system, including a temperature sensor and humidity, moisture sensor, and soil moisture detector. The second part is system control which is monitoring and controlling using an application in a smartphone to ensure optimal water usage and enhance crop health.

This system is not only designed to monitor the soil moisture, temperature and humidity of the crop soil but also purposely tries to lower labor costs, increase the overall sustainability of agricultural techniques, and intentionally improve crop productivity and water management. This Internet of Things (IoT)-based solution offers a contemporary way to address the urgent problems facing agriculture now, paving the path for a more robust and efficient farming industry in the future by giving farmers access to real-time data and automated control.

2. Methodology

The IoT-based smart agriculture monitoring system is designed to monitor temperature and humidity levels in real-time and automatically water the plant based on predefined thresholds. The system uses the temperature and humidity sensor (DHT11) for temperature and humidity monitoring, and a soil moisture sensor to detect the level of soil moisture. These sensors connect to an ESP32 microcontroller, the ESP32 DOIT DEVKIT V1 will serve as the central processing unit for the system. These sensors transmit data to a smartphone application, which gives users immediate access to essential information about their plant. When the temperature and humidity levels surpass predetermined limits, the water pump will function to ensure that crops receive sufficient water at the right time. All this data is displayed on the mobile application which shows the humidity and temperature values, allowing users to set thresholds and control parameters remotely. The temperature can be adjusted to a certain level and depends on the type of plant being grown. ESP32 offers greater capabilities compared to ESP8266 and has more features, such as dual-core processing, Bluetooth, and Wi-Fi connectivity which are necessary for Internet of Things applications. [8]

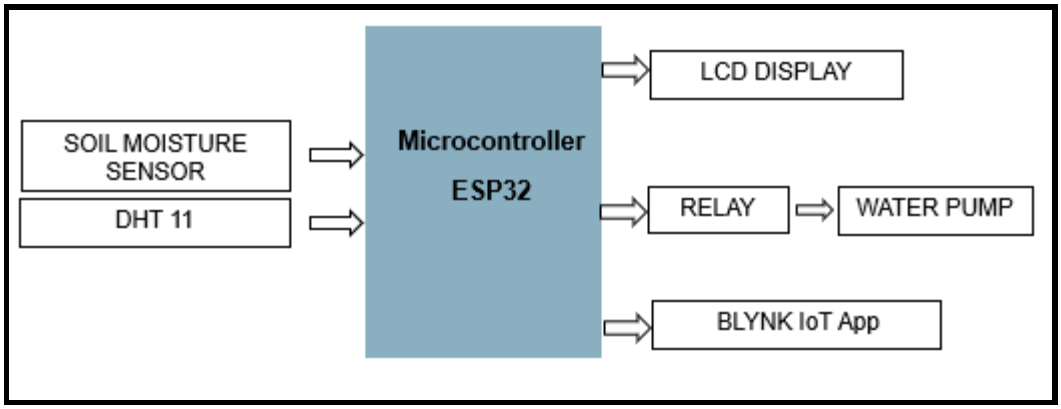

Fig. 3. The block diagram of the system

Figure 3 shows the block diagram of the IoT-based smart agriculture monitoring system which explains the process flow of this project. ESP32 microcontroller comes with GPIOs and is perfectly suited to the IoT project which can operate with components, such as sensors, actuators, and a user interface that also can support a variety of protocols.[9] The system comprises a soil moisture sensor, and DHT11 (humidity and temperature sensor) as the input and all are connected to the ESP32. These sensors continuously monitor the environmental conditions, such as soil moisture, humidity, and temperature, and then convey this data to the ESP32 at regular intervals. The ESP32 processes the incoming data, comparing the current readings to predefined threshold values for soil moisture, humidity and temperature. If the soil moisture level falls below a certain threshold, indicating that the soil is dry, the ESP32 activates the water pump by sending a signal to the relay. This relay acts as a switch to a motor and allows water flow and irrigates the soil. Once the soil moisture sensor detects that the desired moisture level has been reached, the ESP32 signals the water pump to stop, thus stopping the water flow.

Besides, the system also comes with an LCD that has been connected to the ESP32 and indicates the status of the system and sensor readings in real-time. The Blynk IoT App is linked with the ESP32 to enable remote monitoring and control. The ESP32 can transmit data to the Blynk app over Wi-Fi and users can monitor the system's status and the surrounding environment from their smartphones or other internet-connected devices. Additionally, users can sign up to get messages and alerts when specific conditions are fulfilled, including low soil moisture or extremely high temperatures. Users may easily establish or modify threshold values for temperature, humidity, and soil moisture using the Blynk IoT App. If necessary, they can also operate the water pump manually. This combination of automated decision-making, real-time sensor data, and simple user interfaces offers better crop health, and efficient use of water, and can improve agricultural productivity.

2.1 Prototype Development

The process of developing a system starts from the beginning and includes constructing a prototype model. In this method, a basic prototype is built, tested, and then repeated the process upon until the desired outcomes have been achieved. Users can simulate the real system experience by interacting with the prototype to better understand the needs and features of the system. The development process starts with a detailed examination of the system requirements and intended results. This involves developing a conceptual model and detailing the functionalities of the system to ensure that the project objectives are achieved. The first prototype is built using this framework and the Proteus software is used to design and simulate the circuit. Figure 2 shows the project circuit connection using proteus software.

The results of the simulation are then evaluated to determine whether the functionality is according to the goals of the project, providing some basis for determining any improvements or modifications that are required.

Testing and modification are done continuously on the prototype as it is improved. The input from the simulations provides a guide for this improvement, which enables focused changes to improve functionality and performance. To confirm these modifications and make sure the prototype progresses toward fulfilling the project requirements, more testing and simulations are carried out as needed. The project proceeds to the PCB preparation stage as soon as the prototype performs well enough in simulations. This involves constructing the real PCB board and integrating all the prototype's tested parts and configurations. The finished PCB is put through a complete testing process to make sure it satisfies all project requirements. The project's goal is to create a fully functional and dependable IoT-based smart agriculture for monitoring system through this continuous improvement method. The above process ensures that the result is tested, practical to use, and fulfills the specified requirements, finally offering an effective solution to contemporary agriculture challenges.

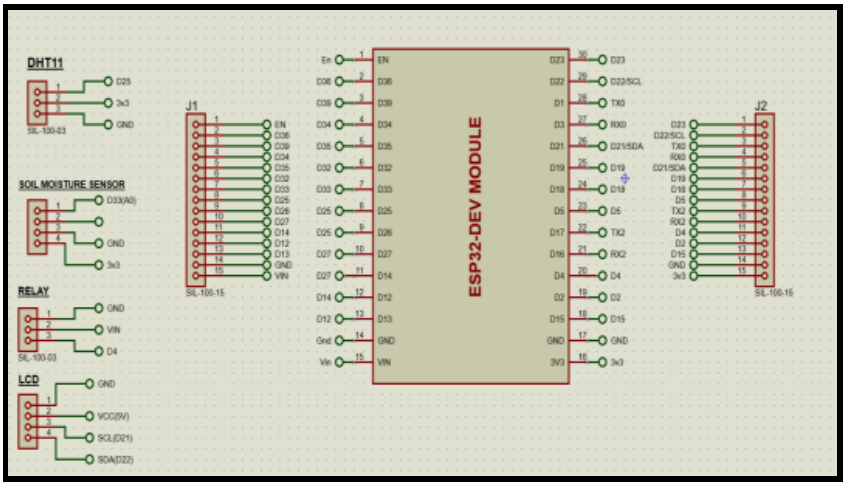

Fig. 4. Project circuit connection

Table 1. GPIO pin connection table

	Input/ Output	ESP32 Pin #	Pin Mode	Name Pin	Note
1	DHT 11	GPIO25	INPUT	DHTPIN	Measure the temperature and humidity of ambient air.
2	Soil moisture	GPIO 33	INPUT	soil moisture	Measure the volumetric water content of the soil.
3	5V relay	GPIO 04	OUTPUT	relay pin	Control water pump on or off through relay.
4	LCD	GPIO 21 GPIO 22	OUTPUT	SDA SCL	Display data at LCD.
5	Water pump	-	OUTPUT	-	Water the plant according to the instructions of the program

Table 1 shows the ESP32 GPIO pin connections for various peripherals. GPIO25 is configured as an input to measure the temperature and humidity of ambient air (DHT11) while GPIO 33 acts as an input of a soil moisture sensor to measure the volumetric water content of the soil; GPIO 04 functions as an output for relay to control water pump on or off for supplying the

water; LCD set to GPIOs 21 (SDA) and 22 (SCL) are arranged as outputs for communication which displaying the data.

All the functionality for data analysis is managed by the Blynks app, which is an application that is run entirely using the internet. It is a user-friendly interface developed to manage and make IoT projects easier.

Without requiring complex coding or technical knowledge, it enables users to construct unique mobile and web applications for controlling and monitoring IoT devices. Real-time temperature and humidity information gathered from the installed sensors is shown on the dashboard. Because this data is updated continuously, farmers or users can stay updated about the condition of the environment. Besides, the dashboard's graphs and charts provide historical temperature and humidity data trends. With the aid of this app, users can examine trends throughout time and come to wise decisions. By instantly notifying the user's mobile device when environmental parameters surpass predetermined thresholds or when there are systemic problems, the Blynk dashboard further improves communication. To better understand how various elements affect crop health and watering requirements, users can generate reports and access thorough analytics. Users may enhance their agricultural practices by using the dashboard to view important performance parameters like crop health indicators, water usage, and system efficiency. The application is simple to navigate and utilize for users because the Blynk dashboard is a relatively easy user interface.

Fig. 5. Blynk App

3. Result and Discussion

The results of the experiment and a thorough analysis of the data are presented in this section. This study's main goal was to find out how well different sensors that were attached to an ESP32 microcontroller performed in terms of monitoring environmental conditions. In addition to monitoring a water pump via a 5V relay, data was gathered from soil moisture sensors and temperature and humidity sensors (DH11). The real-time data was presented on an LCD. Key findings, patterns, and abnormalities are highlighted in the analysis of the data, which assesses the system's dependability and effectiveness. Table 2 shows the data analysis for the temperature, humidity, and soil moisture for this research. This study is essential to understanding the actual implications of our findings and evaluating the system's potential application and constraints in real-world situations.

To ensure optimal plant growth and minimize negative effects from severe weather, data on soil moisture, temperature and humidity sensor (DHT11) are collected and analyzed. Warmth and high humidity can harm plants; thus, these conditions are important. This study focuses on three critical temperature phases: the flowering phase, which happens at 28°C and 40–50% humidity, the vegetative phase, which occurs at 25°C and 60–70% humidity, and additional critical temperature thresholds.[10] [11]

Table 2. Data analysis

Variable Name	Symbol	Function
Temperature	°C	Collect ambient temperature
Humidity	%	Collect air humidity
Soil Moisture	%	Collect soil moisture

Air temperature and humidity are collected because this aims to avoid the adverse effects of high temperature or high humidity which can cause the soil to dry out and plants to die or grow with poor quality. Plant growth occurs at three different temperature points. This includes the lowest, highest, and lowest temperatures. For example, in this research, the ideal humidity and temperature for flowering plants can vary depending on the specific plant species. However, in general, many flowering plants develop well at temperatures between 20°C -30°C and levels of humidity around 40% to 60%. Some tropical flowering plants may be more suitable at a slightly higher level of humidity, in the range of 60% to 80%. It is important to learn the specific needs of plant species because Malaysia has a variety of flora with different requirements for growth and optimal flowering. [12]

Besides, data on soil temperature were gathered, which is crucial for both plant nutrient availability and the best possible functioning of soil organisms. All the data points—which included soil temperature, moisture content, air temperature, and humidity—were transferred to the Blynk cloud for additional analysis after being shown on an LCD. With real-time changes and insights into soil and plant health made possible by this extensive monitoring system, plant care may be improved and made more effective.

After logging into the blynks application, the user gains access to the system status notifications. Users also can regulate the water pumps to water the plant according to the setting. The soil moisture sensor measures soil moisture and the DHT 11 sensor measures air temperature and humidity and transmits the data to ESP32. The ESP32 processes this signal and consequently activates and deactivates the water pumps, while simultaneously transmitting motor status and soil data to the user via the application. The actual prototype that is used for this system is represented in Figures 6, 7, and 8.

The Blynk dashboard in Figure 9 for this project provides a comprehensive overview of key environmental parameters over a one-day observation period. The dashboard's Online Status indicator shows that the system is currently online and operational, as indicated by the green status. There are two irrigation indicators. The first indicates whether irrigation is currently active, and the second shows a toggle switch for manual control. In the dashboard, irrigation appears to be off, as shown by the gray status. The Automation Status toggle switch indicates whether the automatic irrigation control based on sensor thresholds is active. The switch is green, indicating that automation is enabled.

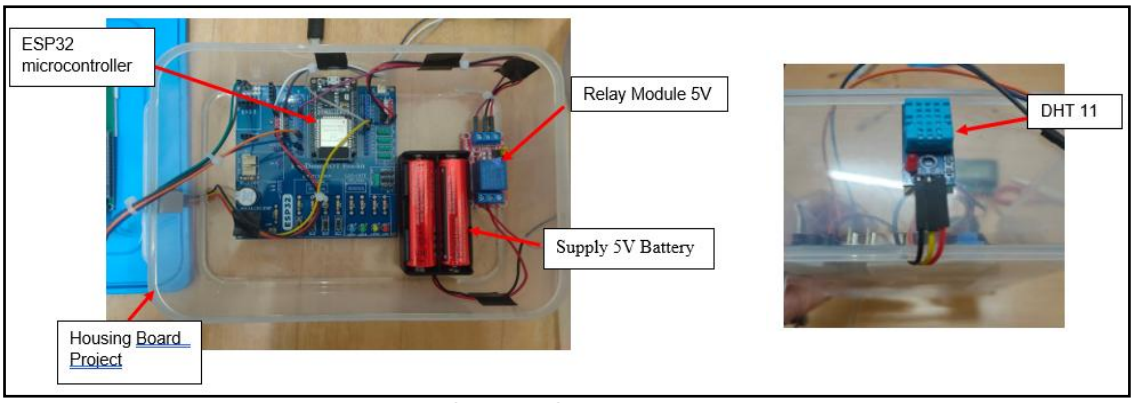

Fig. 6. Main components

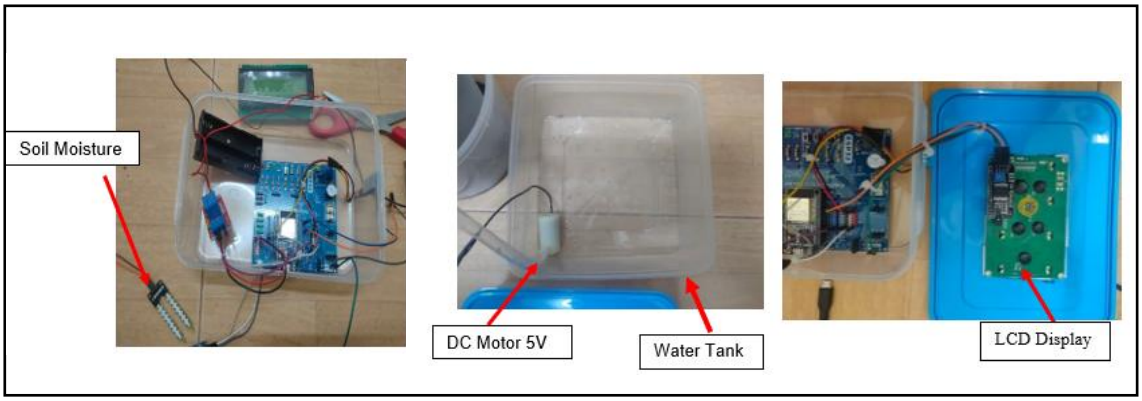

Fig. 7. Irrigation system components

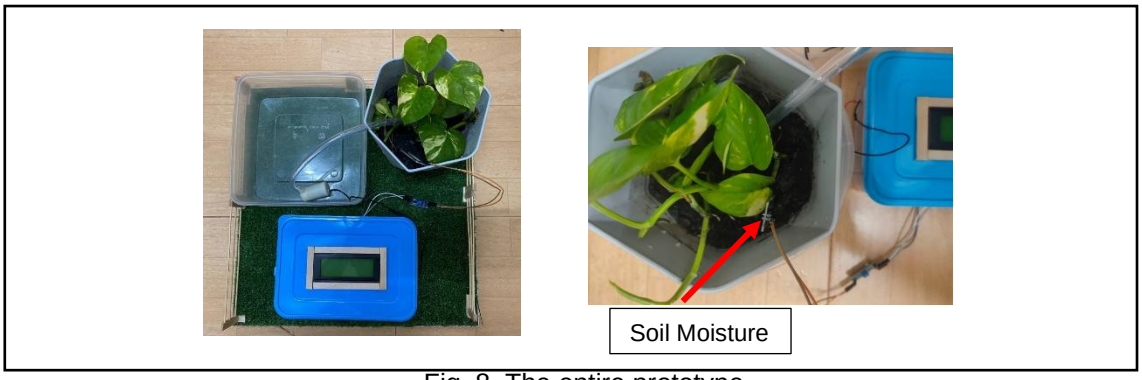

Fig. 8. The entire prototype

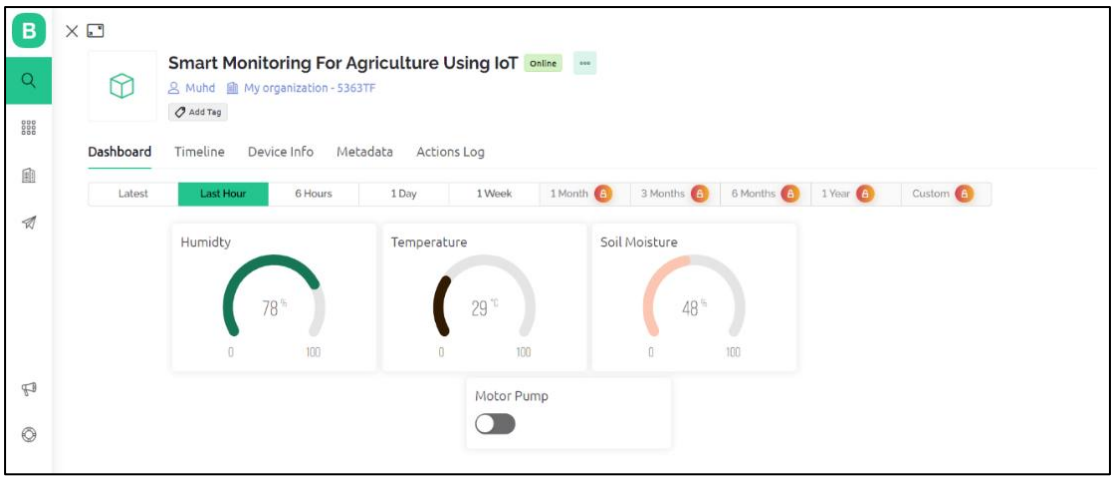

Fig. 9. Blynk Dashboard on laptop

Fig. 10. Blynk Dashboard in Mobile Phone

The Environmental Parameters are shown in the details in Table 3.

Table 3. Environmental Parameters

Variable Name	**Reading**	**Description**
Temperature	The gauge shows a current temperature of 29°C.	The overall trend of the temperature over the observation period displays slight variations between 27.5°C and 29°C.
Humidity	The gauge shows a current humidity level of 78%.	Throughout the monitoring period, there were only slight variations in the consistently high humidity levels.
Soil Moisture	The gauge indicates a soil moisture level of 52%.	The variations in soil moisture level during the duration of the observation period, show a rather constant moisture level with minor declines.

According to the data in table 3, the high humidity level points to a rather moist climate, which can be advantageous for some crops but also points to the need for close observation to avoid the development of mold growth or other moisture-related problems. Given that the temperature is in a moderate range, various crops may be able to grow successfully there.

The data on soil moisture level indicates that the soil has sufficient moisture since it is greater than 50%. As it ensures that crops are not under pressure from water, this is important for plant health. However, in this research, it was not equipped with a soil temperature sensor. It would be better if a soil temperature sensor was placed in the soil to identify the soil temperature, so the data would be greater.

The water supply is not on right now, but if the automation feature is activated, the system is set up to turn it on automatically. If necessary, users can manually adjust irrigation via the dashboard. Enabling automation ensures that the system will react to environmental changes on its own and maintain ideal growing conditions by turning on the irrigation as needed.

4. Conclusion

This project's implementation of an IoT-based smart agriculture monitoring system is an immense step forward for contemporary farming methods. Through the application of a network of sensors, this system continually records temperature and humidity, which are two important environmental characteristics. This is to ensure that crops receive the best care possible through timely and accurate irrigation. Users will have a user-friendly and reliable tool for remote control, in-depth analytics, and real-time data monitoring with the integration of the Blynk dashboard application. In conjunction with saving water by avoiding over-irrigation, the system's capacity to automate irrigation based on preset criteria improves healthy plant growth by preserving stable soil moisture levels. This research significantly can reduce human expenses as well as improve decision-making when integrated with the ease of remote access and personalized notifications. Generally, this research shows how IoT technology could potentially be utilized to develop more effective and sustainable agriculture methods. Putting such a system into operation may result in better agricultural practices, more yields, and enhanced crop health. Farmers may minimize their influence on the environment, maximize resource utilization, and create the foundation for a more intelligent and sustainable agricultural future by implementing this technology.

References

[1] N. Gondchawar and R. S. Kawitkar, “IJARCCE IoT based Smart Agriculture,” *International Journal of Advanced Research in Computer and Communication Engineering*, vol. 5, 2016, doi: 10.17148/IJARCCE.2016.56188.

[2] N. Suma, S. R. Samson, S. Saranya, G. Shanmugapriya, and R. Subhashri, “International Journal on Recent and Innovation Trends in Computing and Communication IOT Based Smart Agriculture Monitoring System,” 2017, [Online]. Available: http://www.ijritcc.org

[3] S. V, “Internet of Things (IoT) based Smart Agriculture in India: An Overview,” *Journal of ISMAC*, vol. 3, no. 1, pp. 1–15, Feb. 2021, doi: 10.36548/jismac.2021.1.001.

[4] N. Suma, S. R. Samson, S. Saranya, G. Shanmugapriya, and R. Subhashri, “International Journal on Recent and Innovation Trends in Computing and Communication IOT Based Smart Agriculture Monitoring System,” 2017, [Online]. Available: http://www.ijritcc.org

[5] S. R. S. S. S. G. S. R. S. Dr.N.Suma, “IoT BASED SMART AGRICULTURAL MONITORING SYSTEM,” 2017, Accessed: Jul. 25, 2024. [Online]. Available: https://www.ijritcc.org/index.php/ijritcc

[6] S. V. Kumar, C. D. Singh, and K. Upendar, “Review on IoT Based Precision Irrigation System in Agriculture,” *Current Journal of Applied Science and Technology*, pp. 15–26, Dec. 2020, doi: 10.9734/cjast/2020/v39i4531156.

[7] M. Bhagyashree, A. Tapakire, and M. M. Patil, “IoT based Smart Agriculture using Thingspeak.” [Online]. Available: www.ijert.org

[8] M. Fezari, N. Zakaria, and A. Al Dahoud, “Comparative study between two Powerful NodeMCU Circuits: ESP32 and ESP8266,” 2019. [Online]. Available: https://www.researchgate.net/publication/332354228

[9] R. Michon *et al.*, “A Faust Architecture for the ESP32 Microcontroller,” 2020. [Online]. Available: https://www.raspberrypi.org/

[10] a C. P. C. a V. C. a and E. R. Catarina C. Nievola, “Rapid responses of plants to temperature changes,” *https://www.ncbi.nlm.nih.gov/pmc/articles/PMC5800372/*, 2017.

[11] S. Ansari and R. R. Deshmukh, “‘Estimation of Soil Moisture Content: A Review,’” *“Estimation of Soil Moisture Content: A Review,”* , 2017.

[12] Casey, “How Malaysias Climate Influences Its Flower Industry,” *https://www.abetterflorist.my/how-malaysias-climate-influences-its-flower-industry/*, 2023.